Parts Breakdown

ITEM 58224

PEUGEOT 306 MAXI WRC

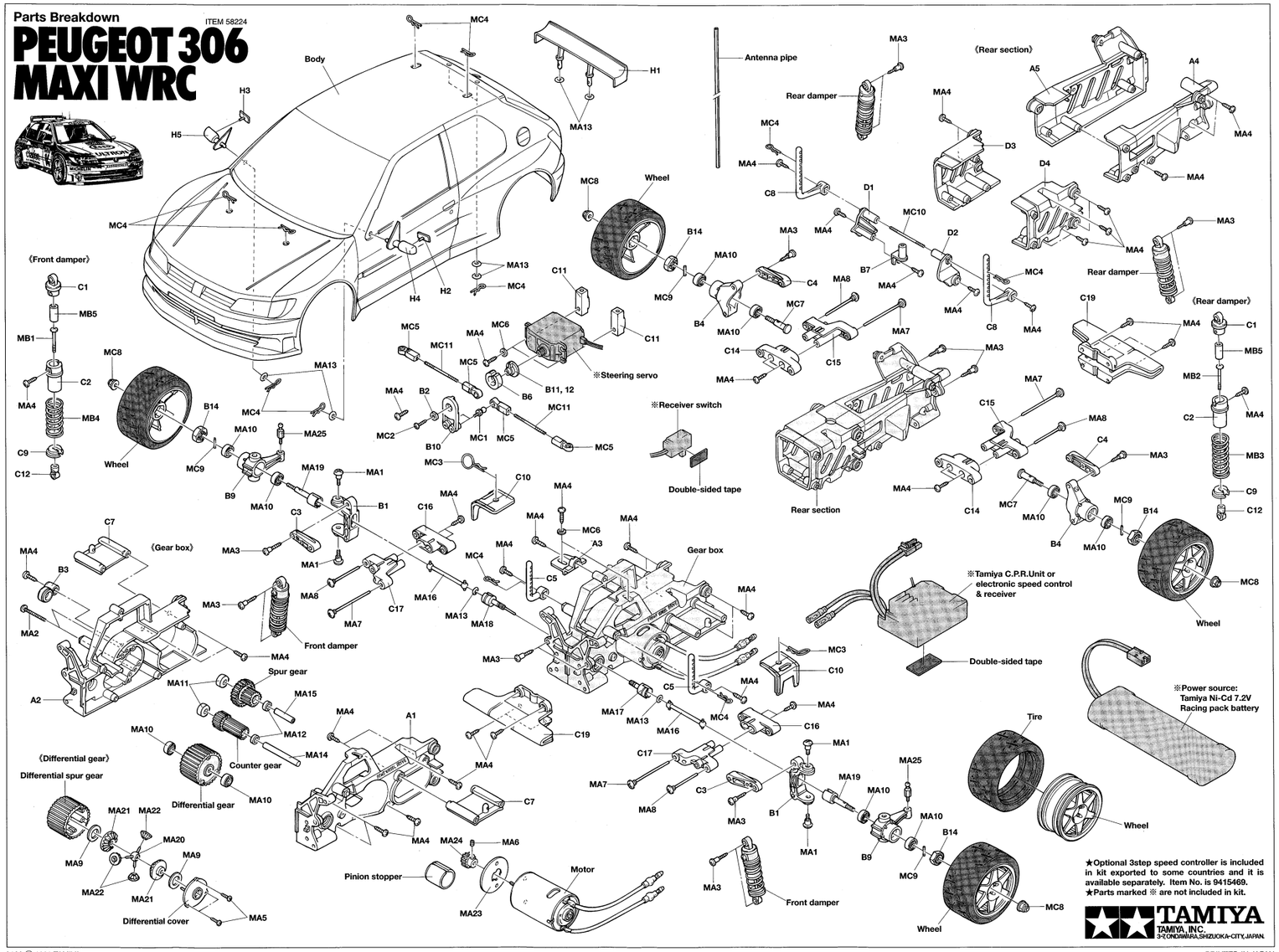

★Optional 3step speed controller is included in kit exported to some countries and it is available separately. Item No. is 9415469.
★Parts marked ※ are not included in kit.

TAMIYA
TAMIYA, INC.
3-7,ONOSAWARA,SHIZUOKA-CITY,JAPAN.

0199 © 1999 TAMIYA

PRINTED IN JAPAN